25 287 DA0 **ESSENCE CONCEALED SHOWER SYSTEM WİTH RAİNSHOWER MONO 310**

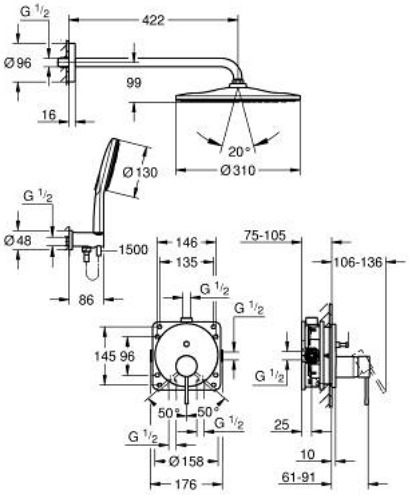

ÜRÜN AÇIKLAMASI

- Renk: warm sunset
- içerdiği parçalar:
- concealed single-lever mixer with 2-way diverter (24 167)
- GROHE Rapido SmartBox universal rough-in box, 1/2" (35 604)
- Rainshower Mono 310 head shower set including horizontal shower arm 422 mm
- Rainshower SmartActive 130 hand shower 3 sprays
- shower outlet elbow 1/2" with holder (26 658)
- Siverflex duş hortumu 1500 mm
- optional flow regulator 9.5 l/min included for hand shower